SPEC SHEET

Residential Ladder Safety Dock

LAR24



Features
Slotted base plate fits a wide range of frame spacing and a maximum spacing of up to 24"
Installs on roof slopes up to 12/12 (45°)
Supplied Ready to Install
Handle screws lock the ladder in place with no tools at the dock
Handle screws capture the fly-rail so the ladder can't shift or kick out

Design Specifications	
Material	ASTM A36 steel
Finish	Electrostatic Paint
Weight	± 20.1 lbs
Maximum Roof Slope	12/12 (45°)
Framing Spacing	12", 16" of 24" O.C.
Ladder Compatibility	Type IA, I, II & III
User Capacity	310 lbs
Installation	Permanent Semi-permanent

Relevant Standards
Designed to help meet OSHA requirements under 29 CFR 1926.1053(b) and 1910.23(c) for securing the top of a portable ladder.

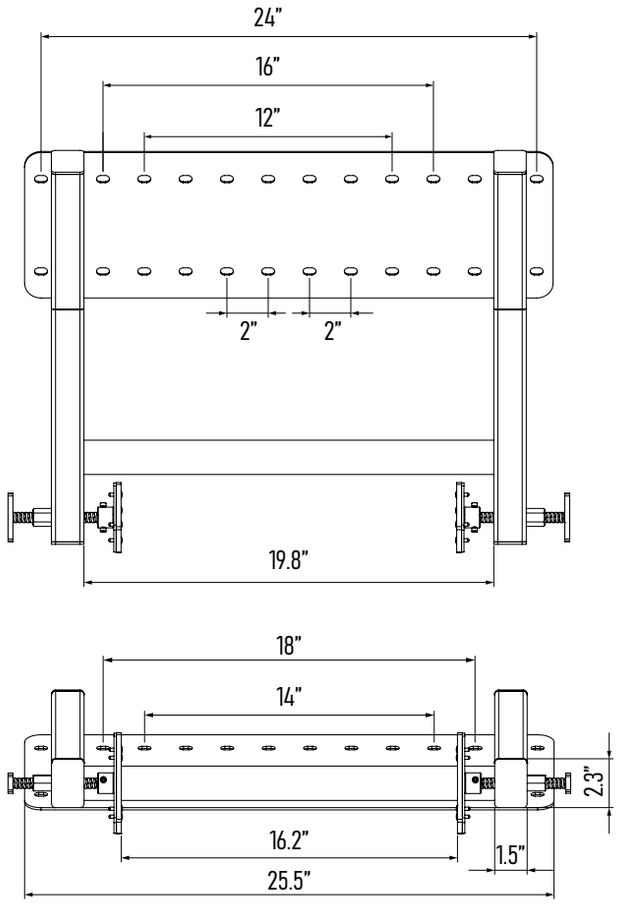

*See user manual for more details

FRONTLINE FALL PROTECTION

www. frontlinefall.com info@frontlinefall.com

6 Lee Blvd, Malvern, PA 19355