SAFETY & OPERATIONS MANUAL

DO NOT throw away these instructions!
Read and understand these instructions before using this product.

Table of Contents

Foundational Knowledge & Safety Compliance

Introduction	3
Applications	4
Safety Precautions	5
Safety & Warning Labels	6
Declaration of Conformity (DOC)	8
Hoisting Safety & Precautions	11
Roof Loading Requirements	12
Rescue Plan & Rescue Winch Installation	13

Operational Guidance for Jobsite Use

Recommended Surfaces	18
Placement/Positioning of Cart	19
Range of Use	20
Connection Points	21
Concrete Application	22
Concrete - Removal of Penetrator Spike Device	23
Concrete - Placement/Positioning of Cart	24
Concrete - Range of Use	25
Parts List Overview	26
Warranty Details	27
Safety Checklist	28 (Back Cover)

PX5 Original Mobile Fall Protection Cart

Part ID: 72838

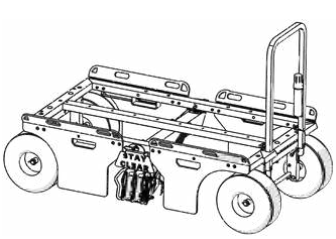

PX5 Sentinel Mobile Fall Protection Cart

Part ID: 72833

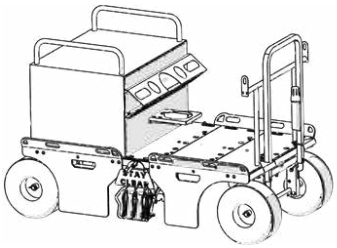

Online Manual (English)

Use these instructions as part of a training program as required by OSHA and any applicable state agency. The user must understand how to safely use the Penetrator and all safety equipment used in combination with the Penetrator Fall Protection device.

A competent person who is highly trained and experienced, assigned by the employer, must be responsible for all elements of a fall safety program, including the regulation, management, and application as it relates to the use of the Penetrator and related components.

WARNING: This product can expose you to chemicals including Nickel, which is known to the State of California to cause cancer.
For more information go to: www.P65Warnings.ca.gov

Instruction Sheet #08391
E1859, Rev. 5/10/24

4404-344-0000 • www.tiedown.com
605 Stonehill Drive SW, Atlanta, GA 30336
sales@tiedown.com

MOBILE FALL PROTECTION

Foundational Knowledge & Safety Compliance

Introduction	3
Applications	4
Safety Precautions	5
Safety & Warning Labels	6
Declaration of Conformity (DOC)	8
Hoisting Safety & Precautions	11
Roof Loading Requirements	12
Rescue Plan & Rescue Winch Installation	13

TIE DOWN Safety Products Division
800-241-1806 • 404-344-0000 • www.tiedown.com

E1859, Rev. 5/10/24

PX5

MOBILE FALL PROTECTION

Original - PX5
Part ID: 72838

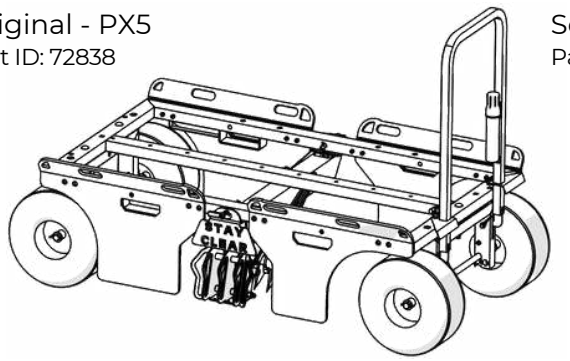

Sentinel - PX5
Part ID: 72833

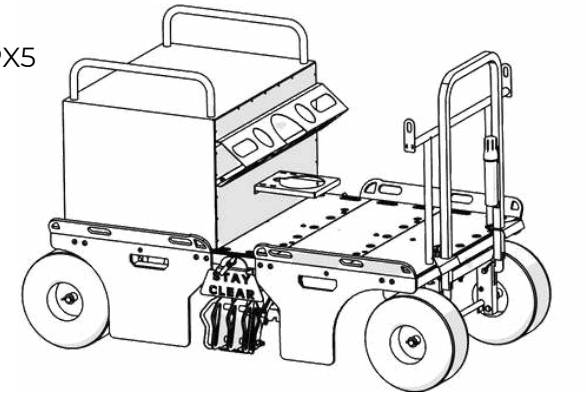

Key Features

The PX5 Penetrating Mobile Fall Protection Unit offers a range of key features designed for safety and efficiency on various roofing materials. This section details the unit's specifications, safety compliance, and capacity to support up to seven workers.

USERS: TOTAL 7 WORKERS

5

FALL ARREST

2

FALL RESTRAINT

Key Features

- For use on built-up, TPO, ISO, PVC, & EPDM
- Limited use on concrete and compacted soil or clay
- Unit Weight:
  - Original: 517 lbs.
  - Sentinel: 1,069 lbs.
- Instruction Manual Holder & on-product QR Code
- Front brake system
- Five steel spikes for roof penetration
- Optional rescue winch with 100 ft. of galvanized lifeline
- flat-free 500 lb. tires (2,000 lb. total capacity)
- Heavy-Duty Material box (Sentinel only)

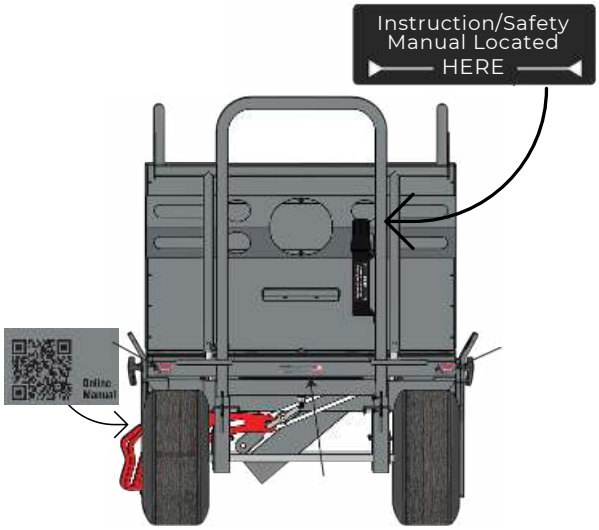

COMPLIANCE: OSHA 1910.140 & 1926.502

*****SEE DOC PAGES 7-8*****

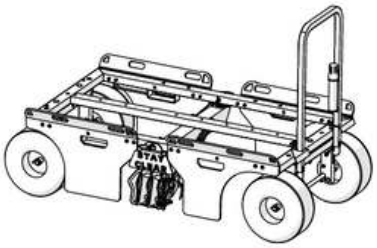

Original - PX5
Part ID: 72838

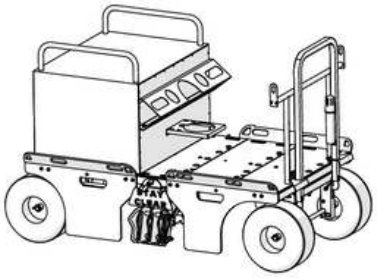

Sentinel - PX5
Part ID: 72833

PX5
MOBILE FALL PROTECTION

Applications

When set up properly the PX5 allows for five workers to be tied off for fall arrest using the specially designed fall arrest connection mechanism. An additional two workers can be tied-off for fall restraint at the specified attachment points.

Fall restraint is a proactive measure designed to prevent falls from occurring in the first place. It involves implementing preventive measures through components such as body harnesses attached to anchorage, connectors, and other necessary equipment. The primary objective is to restrict a worker's movement and prevent them from reaching a position where a fall hazard exists. **The PX5 can be used as an anchorage in a fall restraint system for up to two workers.**

Fall Arrest can be used when fall restraint is not ideal or not an option. It involves utilizing equipment and systems that can effectively arrest the fall and minimize the potential injury or damage. Fall arrest systems typically consist of anchors, anchorage points, connectors, and personal protective equipment (PPE) such as harnesses and lanyards. These components work together to ensure the worker's safety by stopping their fall and preventing them from striking lower levels or encountering other hazards.
The PX5 can be used as an anchorage in a personal Fall Arrest System (PFAS) for up to five workers on approved substrates (see approved surfaces on page 16).

A fall arrest system must meet the following OSHA requirements:

- 1910.140(d)(1)(i)Limit the maximum arresting force on the employee to 1,800 pounds (8 kN)
- 1910.140(d)(1)(ii) Bring the employee to a complete stop and limit the maximum deceleration distance the employee travels to 3.5 feet (1.1 m);
- 1910.140(d)(1)(iii)Have sufficient strength to withstand twice the potential impact energy of the employee free falling a distance of 6 feet (1.8 m), or the free fall distance permitted by the system

Anchorage — Anchorage means a secure point of attachment for equipment such as lifelines, lanyards, or deceleration devices. PX5 is an engineered mobile anchorage device.
PX5 Use - Flat surfaces to slopes up to 1:12.

Before Using the PX5

OSHA requires that before operating the system there must be an inspection for damaged equipment.

1. Check for loose, bent or damaged parts, including the five penetrating spikes.
2. Check welded components for distortion, cracks, or other damage.
3. Check Tie-off shackles for distortion or damage and confirm that they are properly tightened.
4. Check retaining slide bars for rusting and/or wear before each use. All labels must be present and fully legible. (Copies of all labels are attached at the back of this section for accurate inspection.)
5. Check for all pull pins that they are fully inserted and the safety cotter pin clips are attached to each pull pin.

Maintenance and Care

- Inspect PX5 before and after each use.
- Keep wheels free from roofing debris. Any asphalt or adhesives on the tires can cause the wheel brake to function improperly
- Regularly inspect for damaged or missing parts and do not place the PX5 into service until all missing and or damaged parts have been replaced.
- Store the PX5 in a place protected from weather and where only authorized employees have access.
- Maintain finish to prevent corrosion.

General Safety Precautions

- **EXERCISE GOOD JUDGEMENT!** Most accidents can be avoided by using common sense and concentrating on the job at hand. Look around and confirm a safe distance from the roof edge is being maintained.
- The PX5 should not be used by persons whose ability or alertness is impaired by fatigue, intoxicating beverages, illegal or prescription drugs, or any other physical cause that exposes the user or others to injury.
- Always wear proper safety attire.
- Keep hands and feet clear of moving parts. DO NOT stick hands or fingers in the equipment when workers are attached to the PX5.
- Do not operate the equipment near electrical power lines. **ELECTRICITY KILLS!**
- Ensure that all areas directly underneath, and in front of the cart, are clear and free of debris.
- Do not use on roofs with ice or snow.
- Only use the unit on a surface or roof composition for which it has been tested.
- Do not set unit atop unfastened materials. Materials may slide if not mechanically attached to the roof.

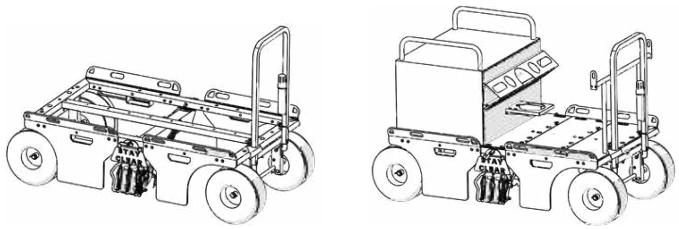

PX5
MOBILE FALL PROTECTION

Safety & Warning Labels

The PX5 Penetrating Mobile Fall Protection Unit is equipped with clear, on-product warning and safety labels. These labels identify the correct connection points for fall arrest, fall restraint, and hoisting, as well as provide warning for any safety concerns. By highlighting these critical points, the unit enhances safety compliance and ensures proper use, helping to protect users on the job site.
CHECK ALL LABELS TO ENSURE PROPER CONNECTION PRIOR TO USE.

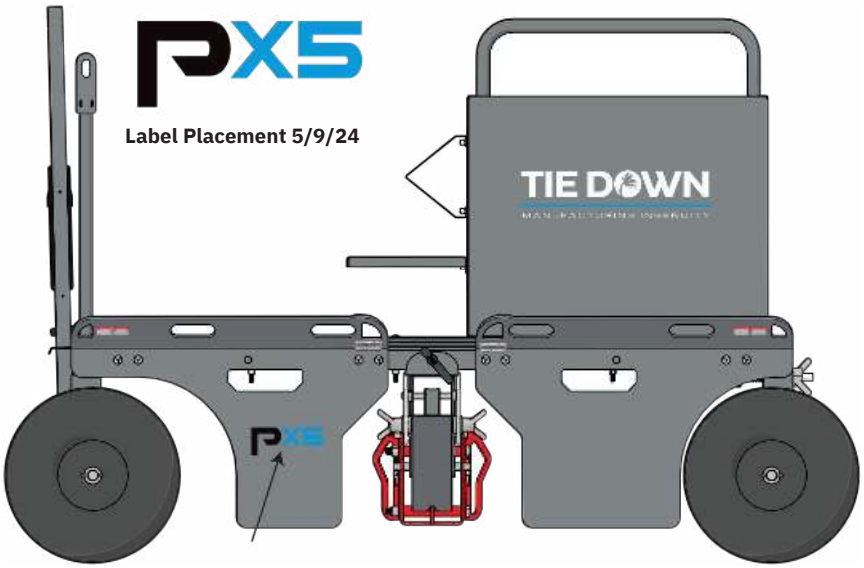

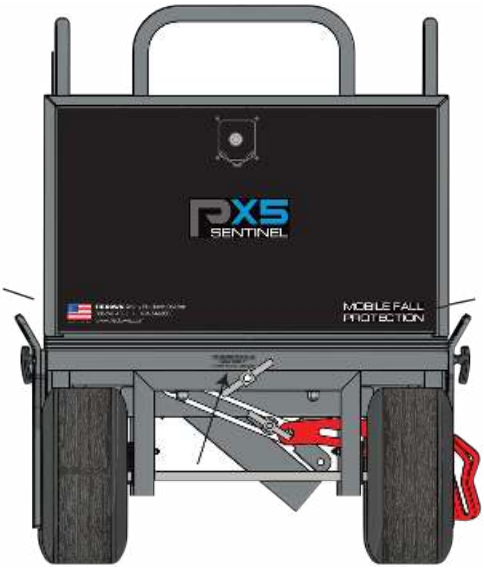

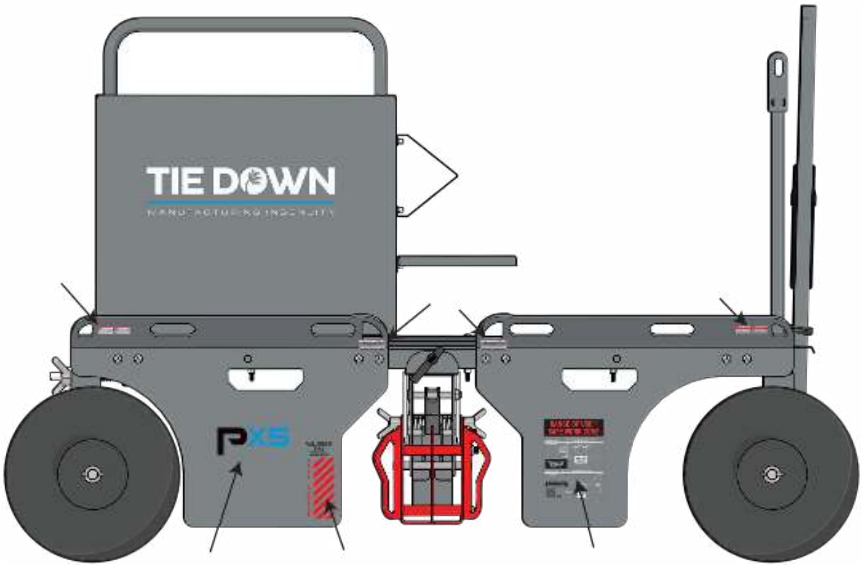

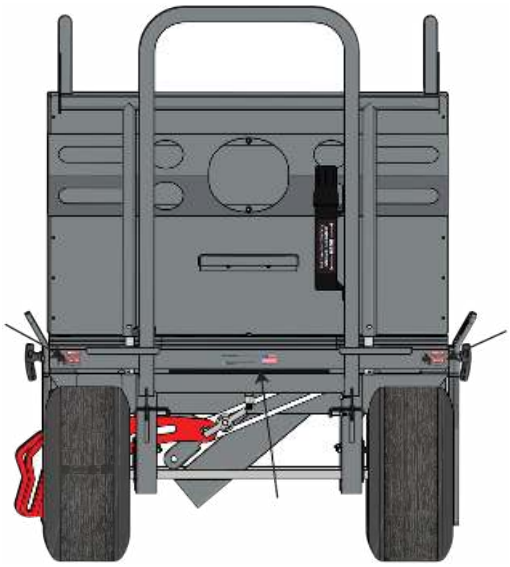

On-Product Safety Labels

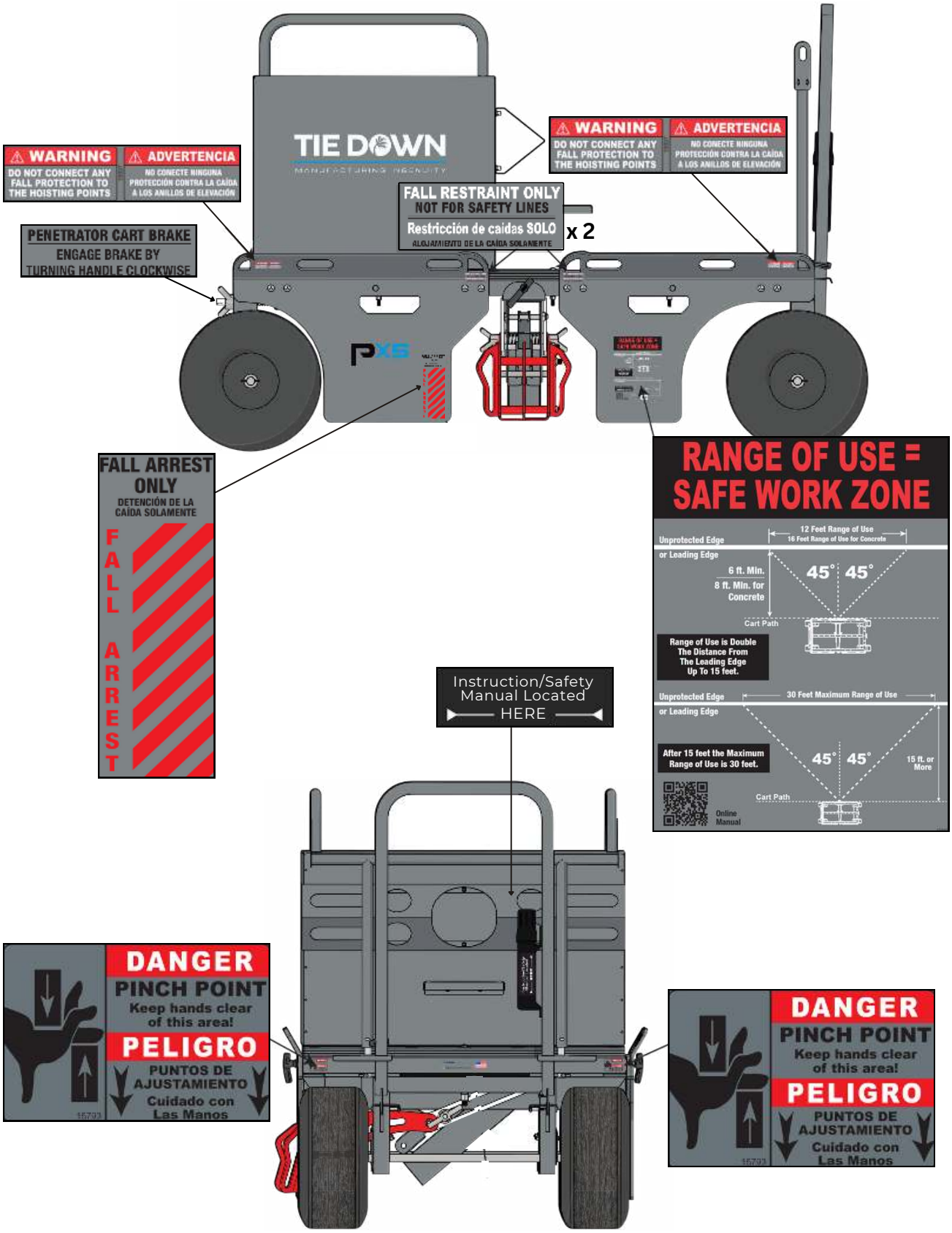

TIE DOWN

MANUFACTURING INGENUITY

DECLARATION OF CONFORMITY

Declaration Date: 08.11.2021
Rev. 0

DECLARATION NO.	**ETR-72836, 72838, 72833, 72839_R1**
PART NUMBER(S):	**72836, 72838, 72833, 72839**
PART DESCRIPTION:	**Penetrator X5 Carts**
ADDITIONAL INFORMATION REGARDING THIS DOCUMENT OR STANDARD(S) EVALUATED:	

TIE DOWN ENGINEERING DECLARES THAT THE PRODUCT(S) LISTED ABOVE IS IN CONFORMITY WITH THE REQUIREMENTS OF THE FOLLOWING PERFORMANCE STANDARDS.

STANDARD(S):
• **OSHA 1926 Fall Protection Criteria OSHA**
• **1910 Personal Fall Protection Systems**

*** This certificate declares that the above standard(s) was met by the requirements of such standard(s). Testing was performed under normal operating measures. The results of testing apply only to the sample(s) tested and to the specific test(s) performed. This certificate is only issued for products which have passed the testing requirements of the standard(s) listed. The end-user is responsible for using the product(s) for its intended purpose(s) only and must review all manuals and instructional documentation prior to use. ***

Tie Down Engineering, Inc.
605 Stonehill Drive, SW
Atlanta, GA 30336

404-3440000
sales@tiedown.com
www.tiedown.com

Test Report	
Test Operator(s): Test	Justin Alcober, Daniel Mathis 8/11/2021, 4/13/2023
Date: Part Number(s):	72836, 72838, 72833, 72839
Part Revision: Internal	0
Test Report: Third Party	ITR-72836,72838,72833,72839_R1
(if applicable):	

Test Summary

Test Specification	Test Criteria	Test Result
OSHA 1910 Subpart I App D OSHA 1926 Subpart M App C	• 6 ft. freefall drop test using a 310 lb. test • mass Test performed with 6 ft. PEA's. Test • mass must not hit the ground or floor.	PASS
OSHA 1910.140(d)	1910.140(d) • Personal fall arrest systems— 1910.140(d)(1) • System performance criteria. In addition to the general requirements in paragraph (c) of this section, the employer must ensure that personal fall arrest systems: 1910.140(d)(1)(i) • Limit the maximum arresting force on the employee to 1,800 pounds (8 kN); 1910.140(d)(1)(ii) • Bring the employee to a complete stop and limit the maximum deceleration distance the employee travels to 3.5 feet (1.1 m); 1910.140(d)(1)(iii) • Have sufficient strength to withstand twice the potential impact energy of the employee free falling a distance of 6 feet (1.8 m), or the free fall distance permitted by the system;	PASS

Tie Down Engineering, Inc.
605 Stonehill Drive, SW
Atlanta, GA 30336

404-3440000
sales@tiedown.com
www.tiedown.com

OSHA 1910 & OSHA 1926

All roof cart models have successfully passed drop testing with a 310 lb. test weight, up to 5 consecutive drops. Test weights did not hit the ground and penetrator device fully deploys into substrate to prevent the cart from moving. Calculations were also performed in accordance with testing and OSHA requirements. The models listed below satisfy the requirements.

Models	Test Material	Max Fall Arrest
72833 72838	TPO	3
	2" ISO	3
	1/2" Plywood	5
	18ga Steel Roof Deck	5
	20ga Steel Roof Deck	5
	22ga Steel Roof Deck	5
72833	Smooth Concrete	2
	Compact Soil and Clay	2

Part ID	Description	Weight Estimates	Minimum Distance from Leading Edge	Minimum Distance from Leading Edge for Compact Soil and Clay
72833	PX5 Sentinel	1069 lbs	8 feet	9 feet
72838	PX5 Standard Cart	517 lbs	8 feet	9 feet

Tie Down Engineering, Inc.
605 Stonehill Drive, SW
Atlanta, GA 30336

404-3440000
sales@tiedown.com
www.tiedown.com

Hoisting PX5

Locate the Hoisting Points on PX5 for crane hoisting the unit onto your work surface.

DO NOT hook to the fall arrest or fall restraint shackle safety line connectors when lifting the cart.

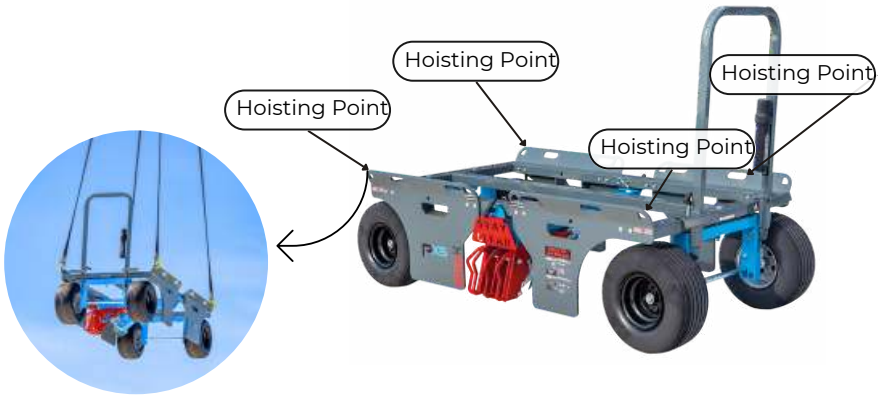

Hoisting Safety Precautions

Loads may slip, if the PX5 is not hoisted properly, this could result in injury or death.

DO NOT use with damaged slings or chains.

Utilize appropriate rigging gear for overhead lifting.

Utilize rigging gear within the industry standards and the manufacturer's recommendations.

Conduct regular inspection and maintenance of the rigging gear.

DO NOT hook to the fall arrest or fall restrain shackle safety line connectors when lifting the cart.

Jobsite Mobility

Once hoisted to the jobsite, the PX5 functions as a mobile anchorage device, designed for easy mobility.

To achieve optimal maneuverability, unpin the handle from its resting position, allowing the worker to unlock 180 degree turning radius range of motion.

Once positioned, make sure the handle/tire brake mechanism is in the down position and the brake stop rests firmly against the front tires

180° Turning Radius

Roofing Load Requirements

Before the PX5 cart is hoisted to any roofing deck the user MUST VERIFY THAT THE DECK CAN ACCOMMODATE THE LOAD REQUIREMENTS.

Verify that the surface that the PX5 will be used on is capable of supporting both the unit, Original weighing 517 lbs or Sentinel weighing 1,069 lbs, and personnel using it. Inspect that the entire area to determine if the working surfaces have the strength and to support users safely.

CAPACITY: PX5 mobile fall protection units are engineered to accommodate up to five individuals for fall arrest and two for fall restraint with a collective weight (including clothing, tools, etc.) not exceeding 310 lbs. per person. The system is designed to support a maximum of seven persons simultaneously connected to the PX5 at any given time.
IMPORTANT: Do NOT initiate work requiring fall protection until both the PX5 system and its corresponding Fall Restraint System (FRS) and Personal Fall Arrest System (PFAS) are fully installed. Under no circumstances should any component of the FRS or PFAS, including the PX5 unit, be disabled or repositioned until work requiring fall protection has concluded.

Rescue Winch (Purchased Separately)

IMPORTANT: BEFORE USING THIS UNIT, A RESCUE PLAN MUST BE ADOPTED.
OSHA requires employers to provide a quick rescue of employees in the event of a fall or employers shall assure that employees are able to rescue themselves. Consult with your roofing distributor/supplier for fall rescue equipment.

Rescue Winch Accessory
Sold Separately, the PX5 Rescue Winch is designed rescue a fallen worker, and is only meant to be used in case of emergency.

Stored safely in the storage tool box, the rescue winch is designed to be installed quickly and easily, in case of rescue.

Rescue Winch Kit
Winch, brackets, roller and all hardware.
Part ID: 72831

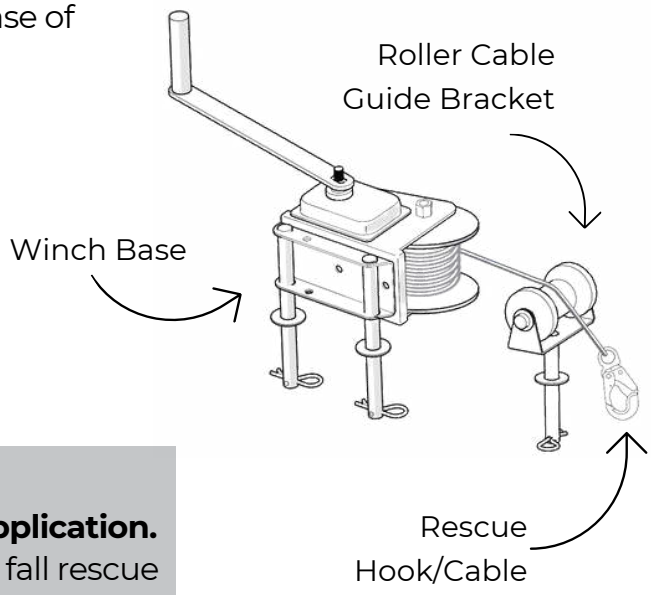

WARNING:
Rescue Winch **can not be used in a concrete application.** Consult with your roofing distributor/supplier for fall rescue equipment or plan for concrete surfaces.

Rescue Winch Installation

Before rescuing a fallen employee....
It is recommended to call 911 before making rescue attempt*

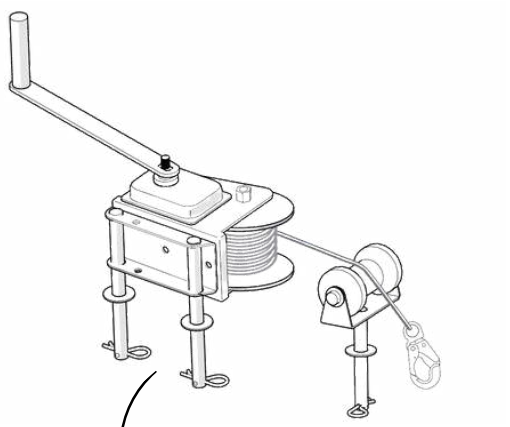

Step 1: Determine the Winch Mounting Locations

Multi-able mounting holes for the rescue winch and roller a shown below. Mount the winch and roller in the straightest and most direct line to the fallen worker.

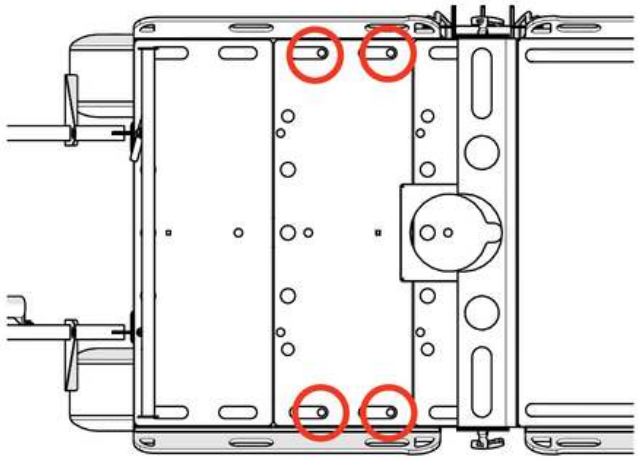

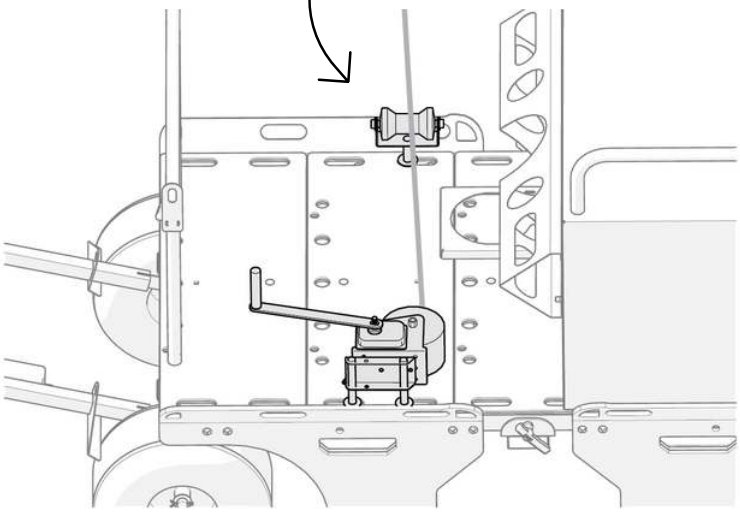

WARNING - Be careful not to come in contact with the five penetrating spikes.

Step 2: Mount Winch and Roller Assembly

Remove the safety pins from the bottom of both winch and roller assembly. Insert the winch mounting post into the appropriate mounting hole.

The safety pin must be inserted into the post before use.

Access to the safety pin is made through the forklift pocket hole on the side of the PX5.

Repeat for the Roller Assembly.

Confirm the cable is going over the front roller on the cart.

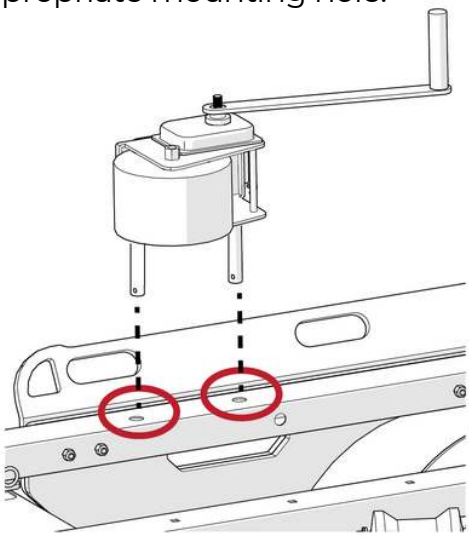

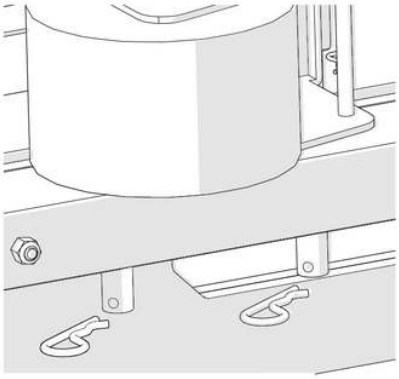

Procedure for Handling the PX5 After a Fall

Before rescuing a fallen employee....
It is recommended to call 911 before making rescue attempt

Any rescuer must be tied off in a Fall Restraint System (FRS) before attempting to aid in a rescue. The number of rescuers allowed to tie off to the PX5 is 5 (five) minus the number of fallen workers. Up to 2 (two) additional rescuers may tie off to the PX3 utilizing the two fall restraint tie-off shackles marked for FRS.

To use the Tie Down Rescue System for the PX5, you will need to also have a rescue pole accessible to properly reach the back dorsal D-ring of the worker who is being rescued. **DO NOT ATTEMPT TO RESCUE THE WORKER UNLESS YOU ARE PROPERLY TIED OFF TO AN APPROPRIATE ANCHORAGE CONNECTION. ATTEMPTING TO RESCUE A WORKER WHEN NOT BEING PROPERLY CONNECTED TO AN APPROVE ANCHORAGE CONNECTION CAN RESULT IN SERIOUS INJURY INCLUDING DEATH.**

Workers must be properly trained in the use of the Tie Down Rescue System PRIOR to use. Do not use the Tie Down Rescue System unless you are trained by a competent person and that training must be documented to have been conducted prior to use. Failure to properly train on the safe use of the Tie Down Rescue System could result in serious injury including death.

Evaluate the situation
The event that led to the fall may create additional risk that need to be addressed. Determine whether the fallen worker is to be lifted back to the roof top or lowered to the ground.

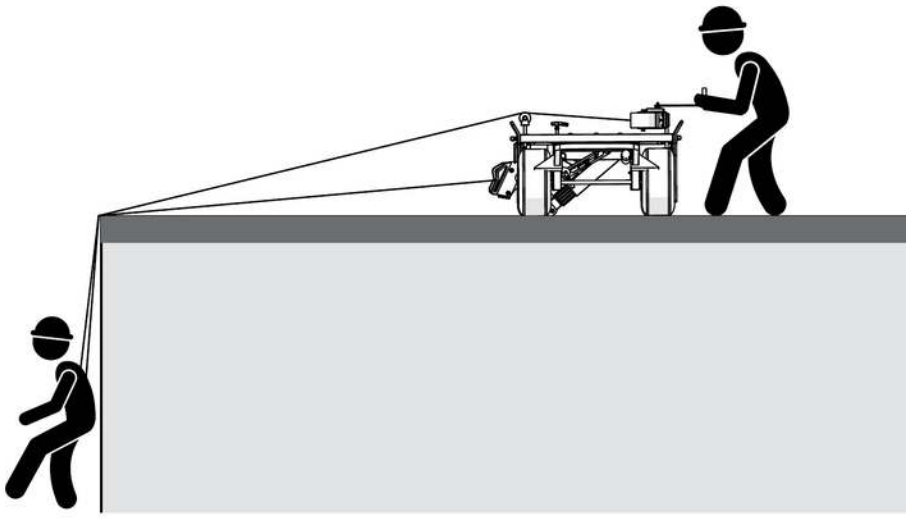

If the Worker is Conscious
Release the cable from the winch and lower it to the fallen worker. Have the fallen worker hook the cable to his harness.

If the cable length and ground conditions allow, it is recommended to lower the worker safely to the ground. If the ground environment is not safe or the cable length is not long enough, then raise the fallen worker to the roof top.

Procedure for Handling the PX5 After a Fall

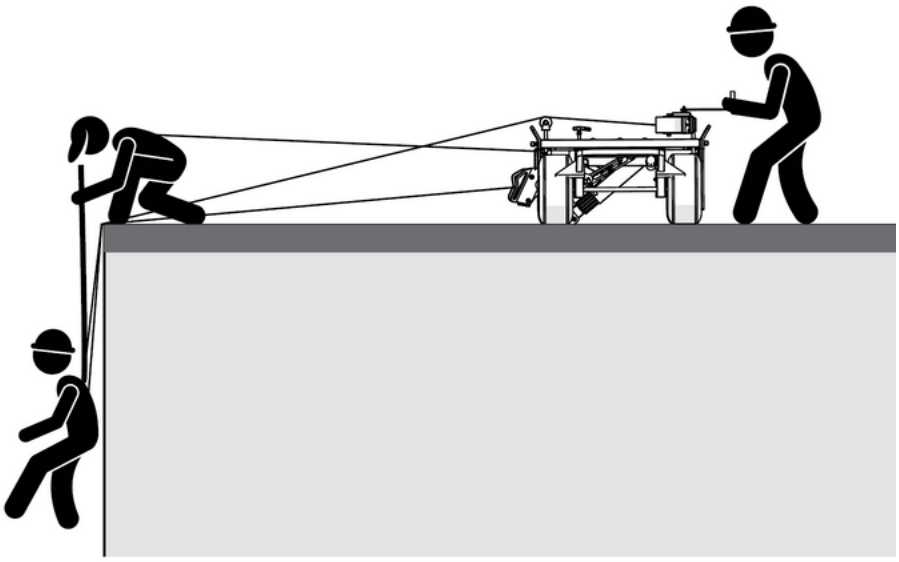

If the Worker is Unconscious
If the fallen worker is unconscious or unable to hook themselves up to the rescue cable additional rescue help will be needed. The additional worker must be tied off to the PX5. Using a rescue pole attach the hook/ cable to the fallen worker.

If the cable length and ground conditions allow, it is recommended to lower the worker safely to the ground. If the ground environment is not save or the cable length is not long enough, then raise the fallen worker to the roof top.

Treat the worker for suspension trauma and any other injuries.

Arrange for transportation to the nearest hospital.

Procedure for Resetting the PX5 After a Fall

Prior to disengaging the PX5 after deployment as the result of a fall incident, make certain that the rescue procedure has been successfully completed.

The five penetrating spikes will be somewhat buried into the roof after activation.

Follow these steps to reset the PX5 Device:

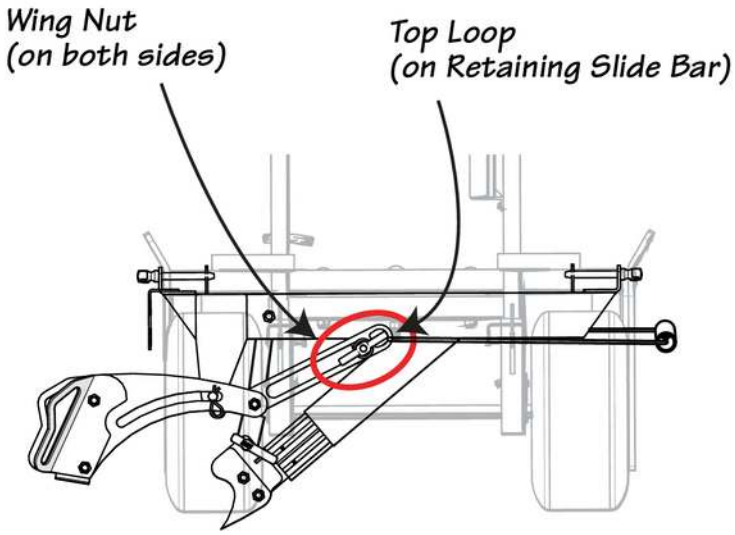

PX5 Device shown in the engaged position

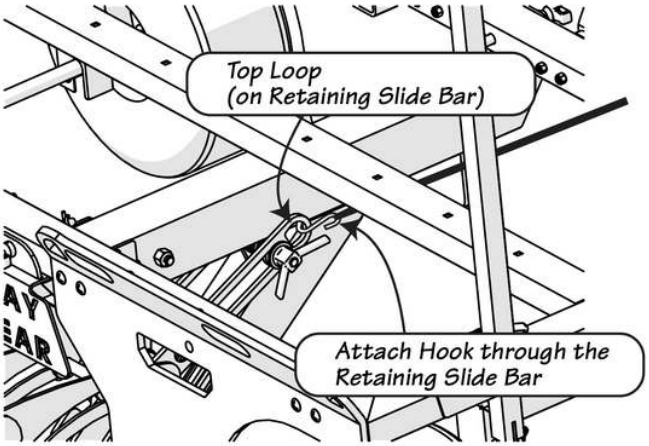

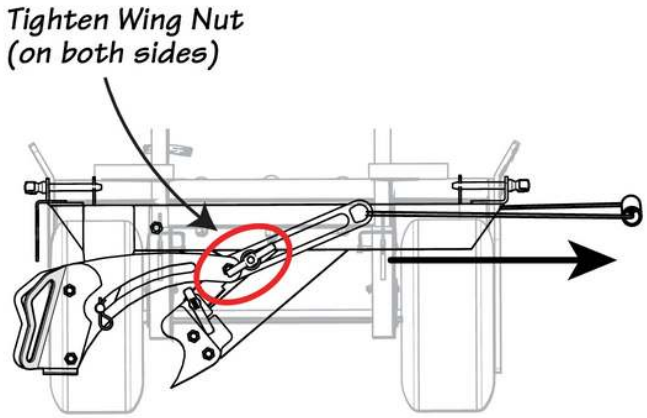

1. Loosen the large wing nuts on both sides of the PX5 device.
2. Attach the pull hooks to the top loop of the retaining slide bar. Repeat for opposite side.
3. With a firm pull, pull the handle outward away from the PX5 cart. The Spike assembly will slide back to it's original position.
4. Re-tighten the large wing nuts on both sides.

Do not reuse the Penetrator after incident until fully inspected and any damaged parts have been replaced and recertification and inspection has been performed. See inspection check list on back cover.

MOBILE FALL PROTECTION

Operational Guidance for Jobsite Use

Recommended Surfaces	18
Placement/Positioning of Cart	19
Range of Use	20
Connection Points	21
Concrete Application	22
Concrete - Removal of Penetrator Spike Device	23
Concrete - Placement/Positioning of Cart	24
Concrete - Range of Use	25
Parts List Overview	26
Warranty Details	27
Safety Checklist	28
	(Back Cover)

TIE DOWN Safety Products Division
800-241-1806 • 404-344-0000 • www.tiedown.com

E1859, Rev. 5/10/24

Applications: Surfaces

Model	Approved Surfaces	MAX Users in Fall Arrest
Original (72838) & Sentinel (72833)	• Thermoplastic Polyolefin (TPO) Membranes • Polyisocyanurate (ISO) • EPDM Roofing Membranes • Ballasted EPDM Membrane	3
	• 18ga Steel Roof Deck • 20ga Steel Roof Deck • 22ga Steel Roof Deck • Plywood	5
Sentinel ONLY (72833)	• Smooth Concrete • Compact Soil & Clay	2

DO NOT Use on the Following Surfaces:

- Metal Deck less than 22 ga. or over 18 ga. (Structural Deck)
- Loose laid material not part of a complete finished system.
- Ice
- Snow
- Tectum Deck

*****SEE DECLARATION OF CONFORMITY (DOC) PAGES 8-10 FOR SURFACE TESTING DETAILS*****

Placement/Positioning of the PX5 Cart

Prior to Positioning the PX5: Verify that the surface is capable of supporting the Penetrator X5, Original weighing 517 lbs or Sentinel weighing 1,069 lbs, and all personnel using it.

During Repositioning the PX5: Active fall restraint is maintained by a maximum length of five feet less than the distance of the cart to the leading edge. The attachment tie-off anchor points must be pointed toward the leading edge and the cart is set to travel parallel to the unprotected edge or leading edge. Position the PX5 such that the front guard plate is **minimum of 6 feet from the leading edge (8 ft. for concrete/clay)**, and in line with the center of the area to be worked.

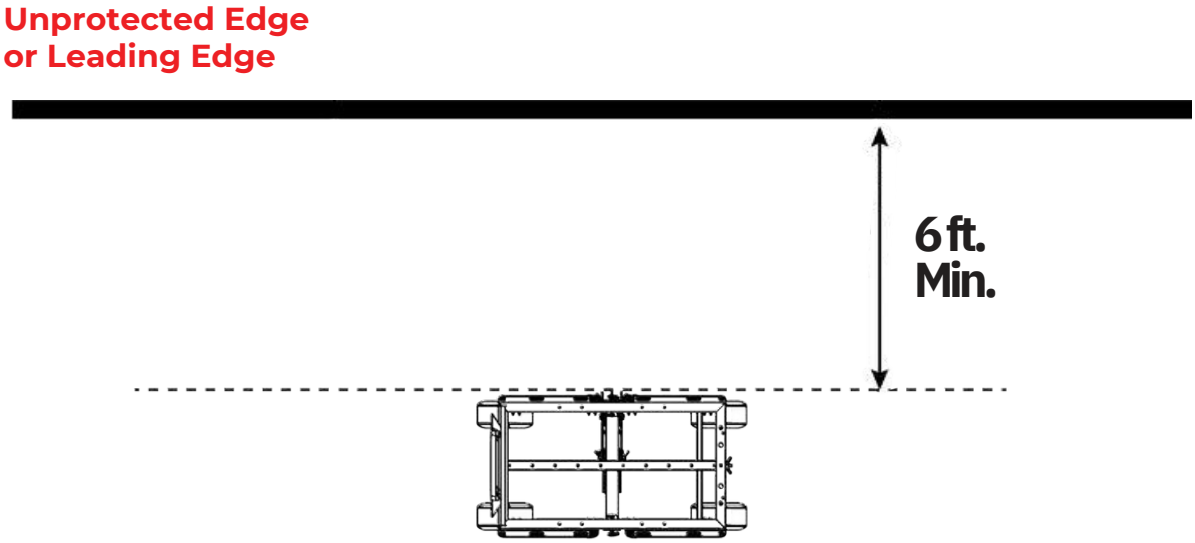

IMPORTANT: When repositioning the PX5, active fall restraint is maintained by a maximum length of five feet less than the distance of the cart to the leading edge. Once repositioned, place brake handle in the down position to lock the wheels.

Placement/Positioning of the PX5 Cart

IMPORTANT: When repositioning the PX5, active fall restraint is maintained by a maximum length of five feet less than the distance of the cart to the leading edge. Once repositioned, the handle must be in the down position in order to lock the wheels and the steering locking pin must be inserted into the steering mechanism (shown below). The rear brake(*) on most Penetrator X5 models must be engaged by turning the brake handle clockwise until tire brake actively engages the tires.

(*) The Original PX5 cart requires only the front steering handle/brake. The rear brake system is an optional installation (included in PX5 Sentinel).

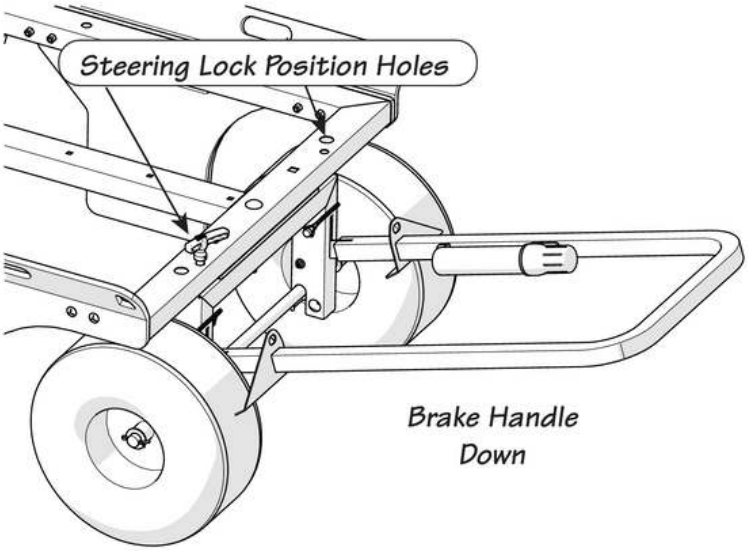

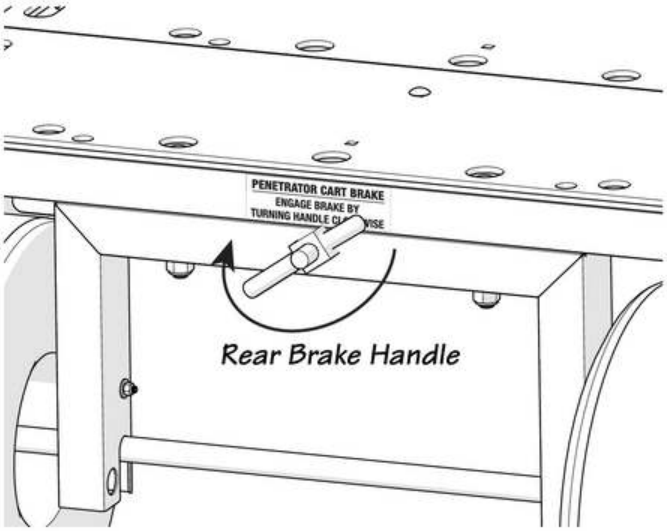

**** included in PX5 Sentinel only***

Make sure the handle/tire brake mechanism is in the **down position** and the brake stop rests firmly against the front tires. Place the Pull Pin into the front axle fork through the appropriate hole located on either side of the cart by aligning with the roof cart frame tube with the front axle fork. This will prevent the cart from turning.

Set the rear by turning the handle clockwise. Stop turning once you feel a firm grip in the tension of the handle

Range of Use

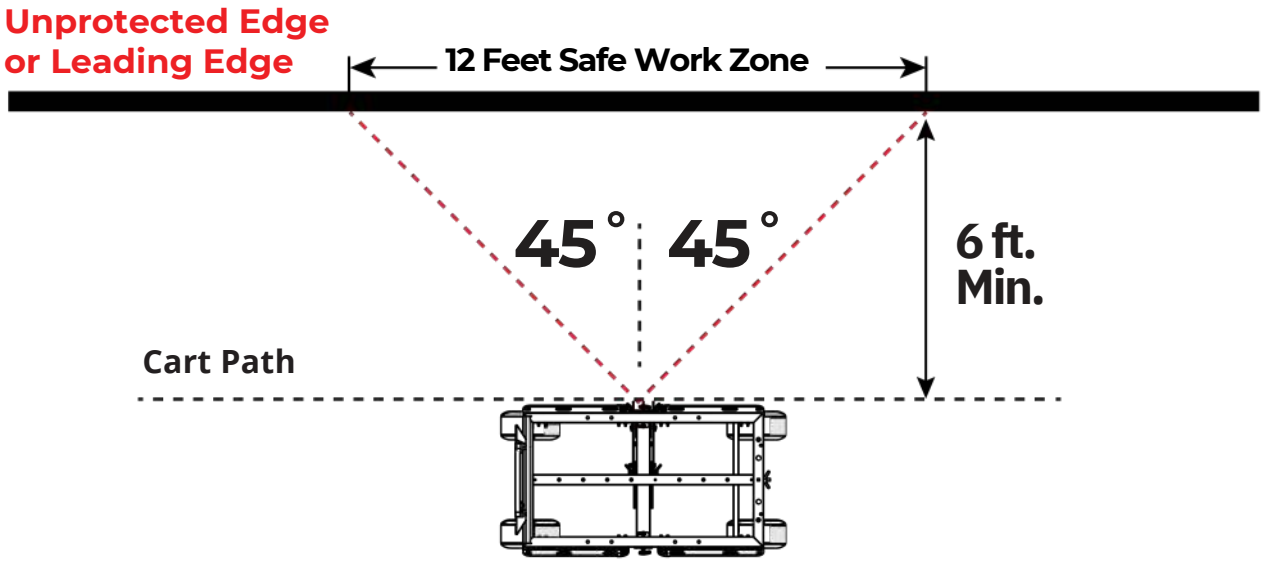

Range of Use is double the distance from the leading edge up to 15 feet.

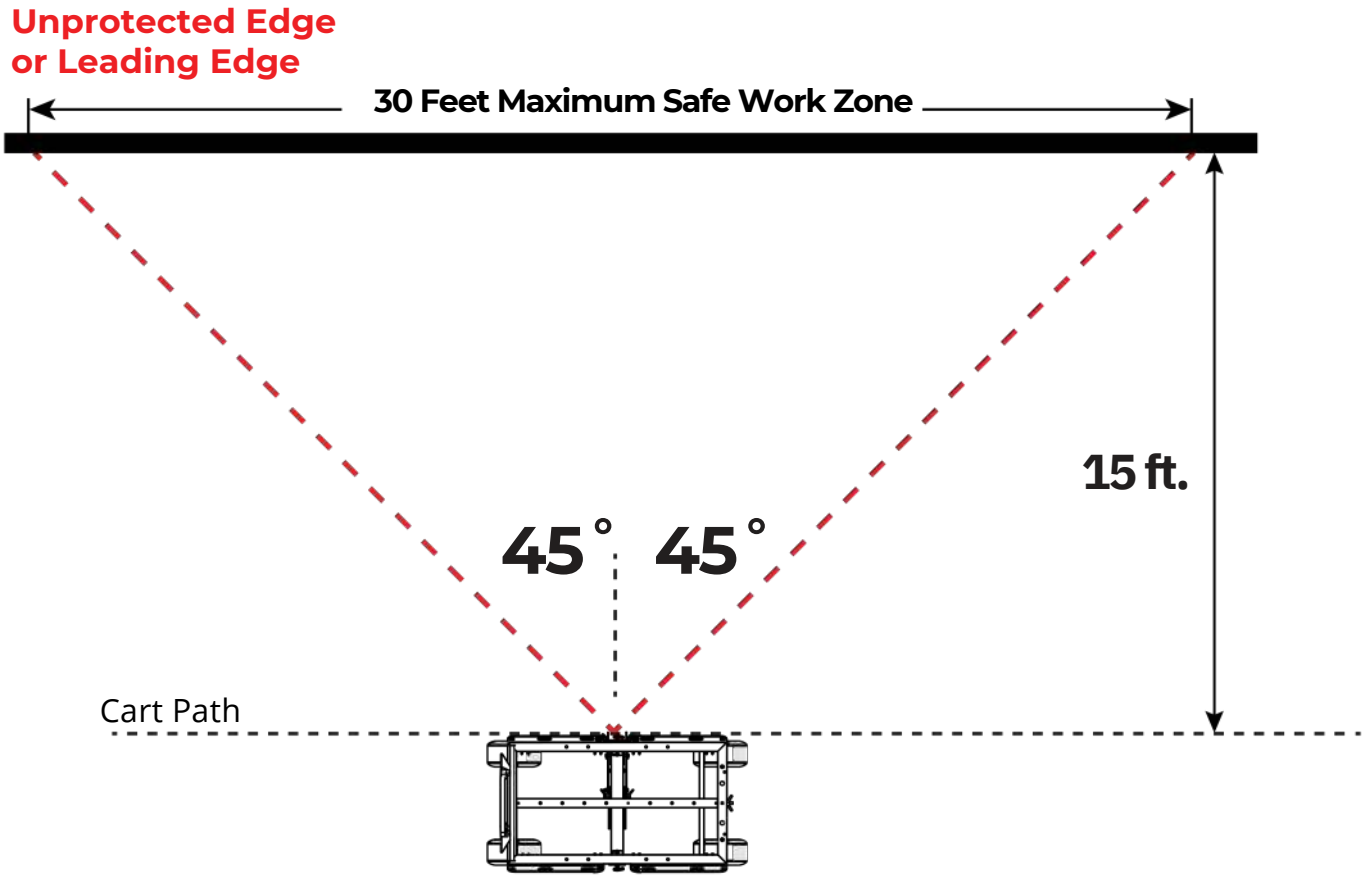

After 15 feet the maximum Range of Use is 30 feet.

Connecting to the PX5

DO NOT hook Personal Fall Arrest System (PFAS) to any point except a Fall Arrest or Fall Restraint Tie-off Anchor Point.

When making connections, only use double-locking snap hooks and double-locking carabiners with this equipment. Only use connectors that are suitable to each application. Ensure all connections are compatible in size, shape and strength. Do not use equipment that is not compatible.
Ensure that all connectors are fully closed and locked.

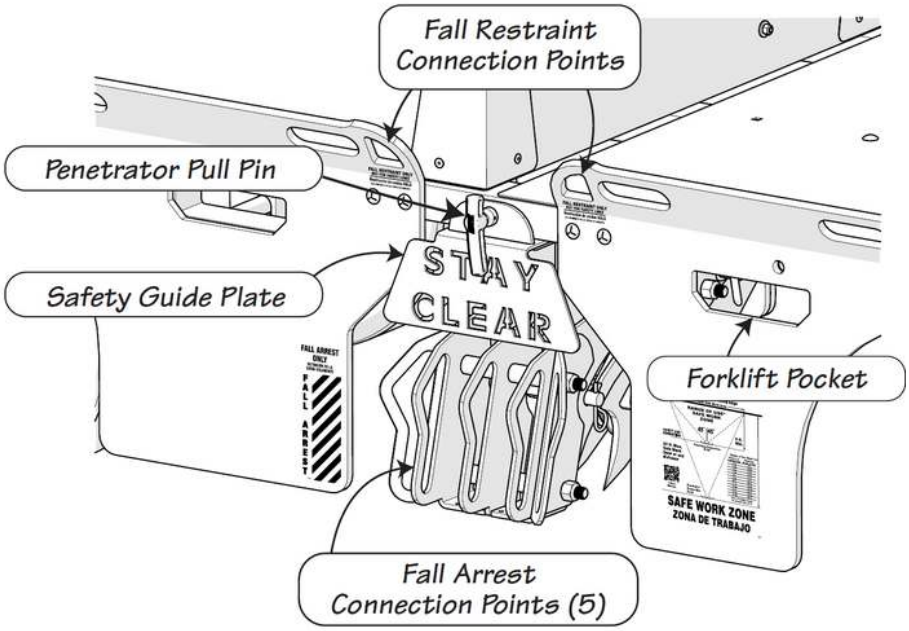

The Fall Restraint Tie-Off
Two Fall Restraint Anchor tie off's are located on the top corners of the PX5 where labeled. The Fall Restraint tie off's DO NOT arrest falls. The user must ensure that the Fall Restraint worker is personally equipped with lanyards, harnesses, safety lines, etc., when working in conjunction with potential fall arrest workers.
Do not attached fall restraints to the hoisting ring locations.
Do Not allow the fall restraint users to work close to any roof edge.

FALL ARREST TIE-OFF
The five Fall Arrest Tie Off points are located on the lower side of the PX5 in bright red, under of the stay clear guard. The user must ensure that the lanyards and harness are properly attached.

IMPORTANT: DO NOT allow workers to cross paths (cross lines) at anytime! Fall Restraint/Fall Arrest lines must never cross over each other. Crossed lines will cause the unit to not function as intended. Failure to maintain clear lines may cause a accident or death.

DO NOT OPERATE DAMAGED EQUIPMENT. DO NOT OPERATE EQUIPMENT THAT HAS BEEN MODIFIED. (Please use the Inspection and Maintenance Log contained within the instructions manual)

Penetrator X5 Device Set Up for **CONCRETE**

Sentinel - PX5
Part ID: 72833

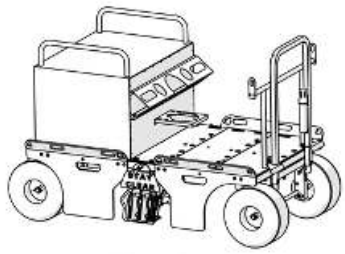

⚠ WARNING ⚠

THE SET UP PROCEDURE FOR CONCRETE REMOVES THE PENETRATOR X5 SPIKE TUBE DEVICE AND CAN NOT USED ON ANY SURFACE OTHER THAN CONCRETE!

Concrete Applications

When set up properly, in a concrete application, the PX5 Sentinel allows for **two workers to be tied off for fall arrest** using the specially designed fall arrest connection mechanism.

An additional **two workers can be tied-off for fall restraint** at the specified attachment points

Surface Load Requirements - **Concrete**

Before the PX5 Sentinel cart is hoisted to any roofing deck the user MUST VERIFY THAT THE DECK CAN ACCOMMODATE THE LOAD REQUIREMENTS.

Verify that the surface that the PX5 Sentinel will be used on is capable of supporting both the unit, weighing 1,069 lbs, and personnel using it. Inspect that the entire area to determine if the working surfaces have the strength and to support users safely.

CONCRETE CAPACITY: PX5 mobile fall protection units are engineered to accommodate up to five individuals for fall arrest and two for fall restraint with a collective weight (including clothing, tools, etc.) not exceeding 310 lbs. per person. The system is designed to support a maximum of five persons simultaneously connected to the PX5 Sentinel at any given time on a concrete surface.

IMPORTANT: Do NOT initiate work requiring fall protection until both the PX5 Sentinel system and its corresponding Fall Restraint System (FRS) and Personal Fall Arrest System (PFAS) are fully installed. Under no circumstances should any component of the FRS or PFAS, including the Penetrator unit, be disabled or repositioned until work requiring fall protection has concluded.

Penetrator X5 Device Set Up for **Concrete**

⚠ WARNING ⚠

THE SET UP PROCEDURE FOR CONCRETE REMOVES THE PENETRATOR X5 SPIKE TUBE DEVICE AND CAN NOT USED ON ANY SURFACE OTHER THAN CONCRETE!

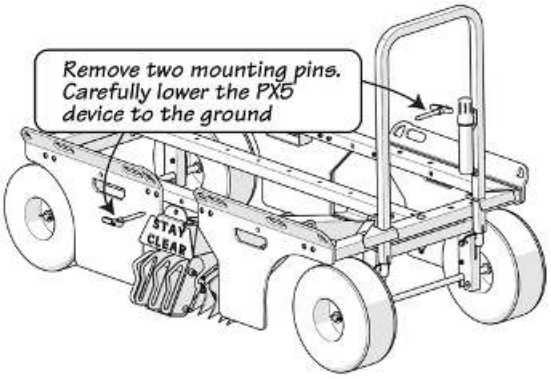

Always use proper PPE. Using two workers remove the safety pins from the top two mounting pins. While holding the PX5 with one hand, remove the mounting pins and carefully lower the PX5 device to the ground

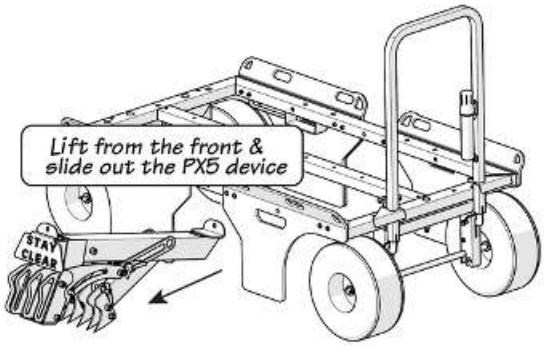

From the front of the PX5 device, lift up the front while pulling the device outward. Be careful not to drag the spikes on the ground. Remove the safety pin from the spike assembly pull pin.

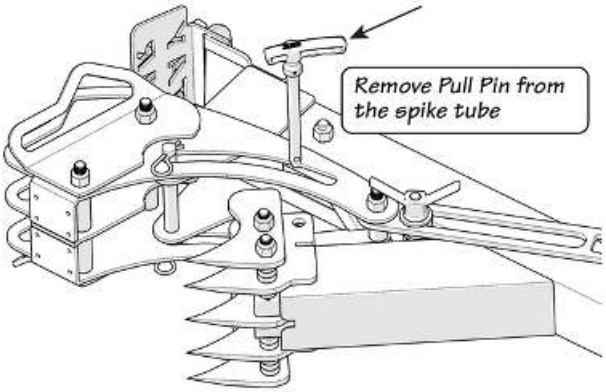

Use extreme caution and lay the PX5 device on its side. Remove the pull pin for the side of the spike assembly.

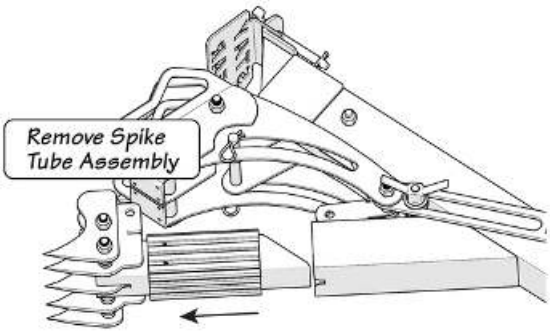

Use extreme caution and pull/slide the spike assembly out of the spike tube. **Use extreme care when handling the spike assembly. The five spikes are extremely sharp.**

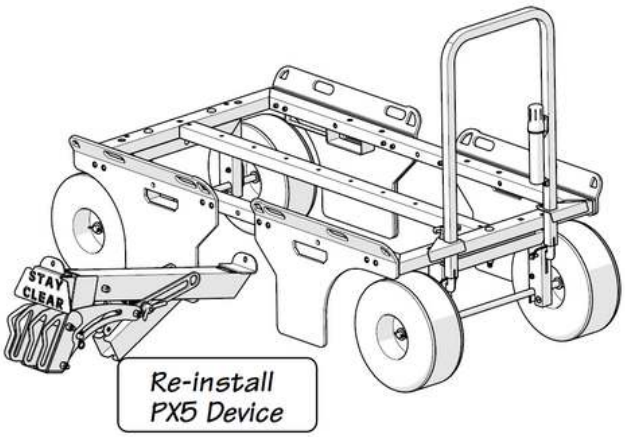

Using two workers, upright the PX5 device. Lift and position the device under the roof cart. With one hand lift the PX5 up and secure the device to the roof cart by replacing the mounting pulls. Reinstall the safety pin to each mounting pin.

Use extreme caution when handling the spike assembly. Carefully store the spike assembly in a safety location.

Concrete Placement/Repositioning of the PX5 Sentinel

Prior to Positioning the PX5: Verify that the surface is capable of supporting the Penetrator X5, Original weighing 517 lbs or Sentinel weighing 1,069 lbs, and all personnel using it.

During Repositioning the PX5: Active fall restraint is maintained by a maximum length of five feet less than the distance of the cart to the leading edge. The attachment tie-off anchor points must be pointed toward the leading edge and the cart is set to travel parallel to the unprotected edge or leading edge. Position the PX5 such that the front guard plate is **minimum of 8 feet from the leading edge**, and in line with the center of the area to be worked.

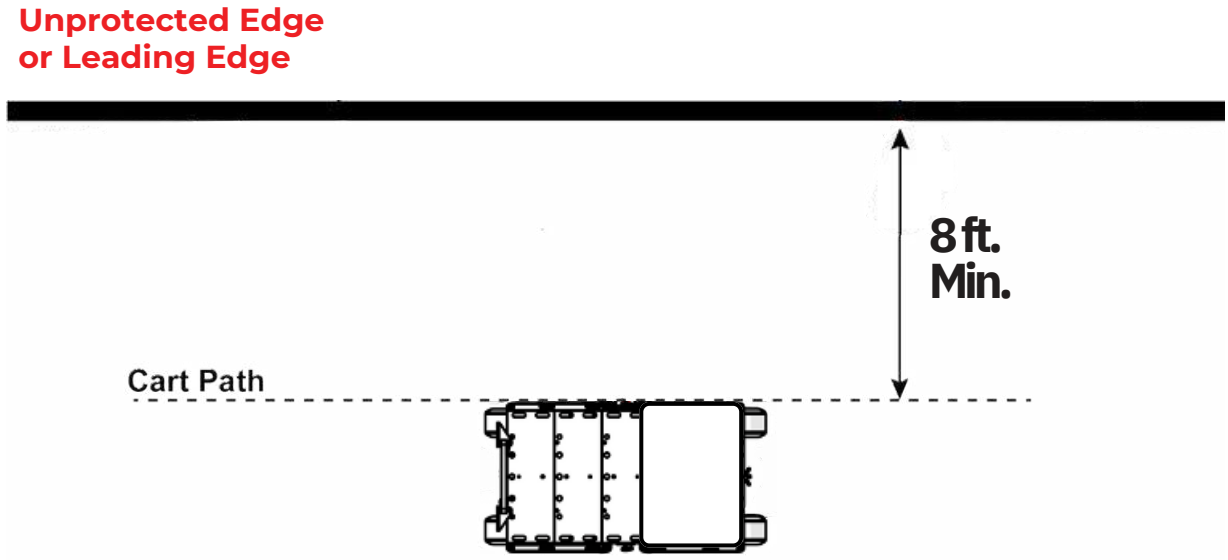

IMPORTANT: When repositioning the PX5, active fall restraint is maintained by a maximum length of five feet less than the distance of the cart to the leading edge. Make sure the handle/tire brake mechanism is in the down position and the brake stop rests firmly against the front tires. Place the Pull Pin into the front axle fork through the appropriate hole located on either side of the cart by aligning with the roof cart frame tube with the front axle fork. This will prevent the cart from turning.
Set the rear brake by turning the handle clockwise. Stop turning once you feel a firm grip in the tension of the handle.

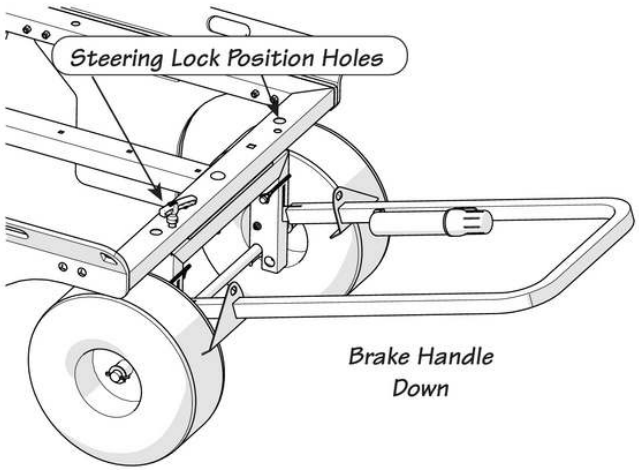

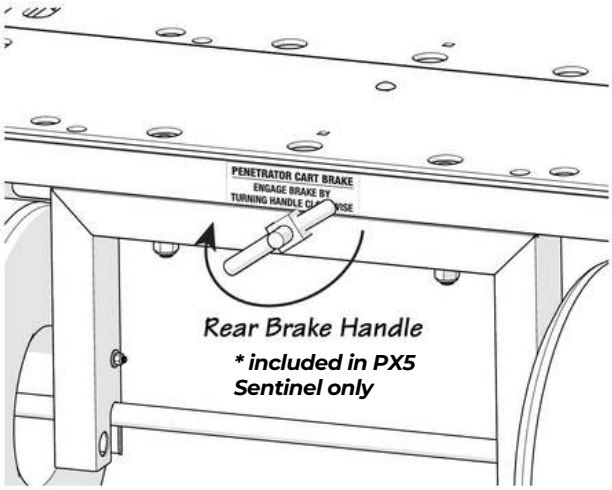

Range of Use for Concrete

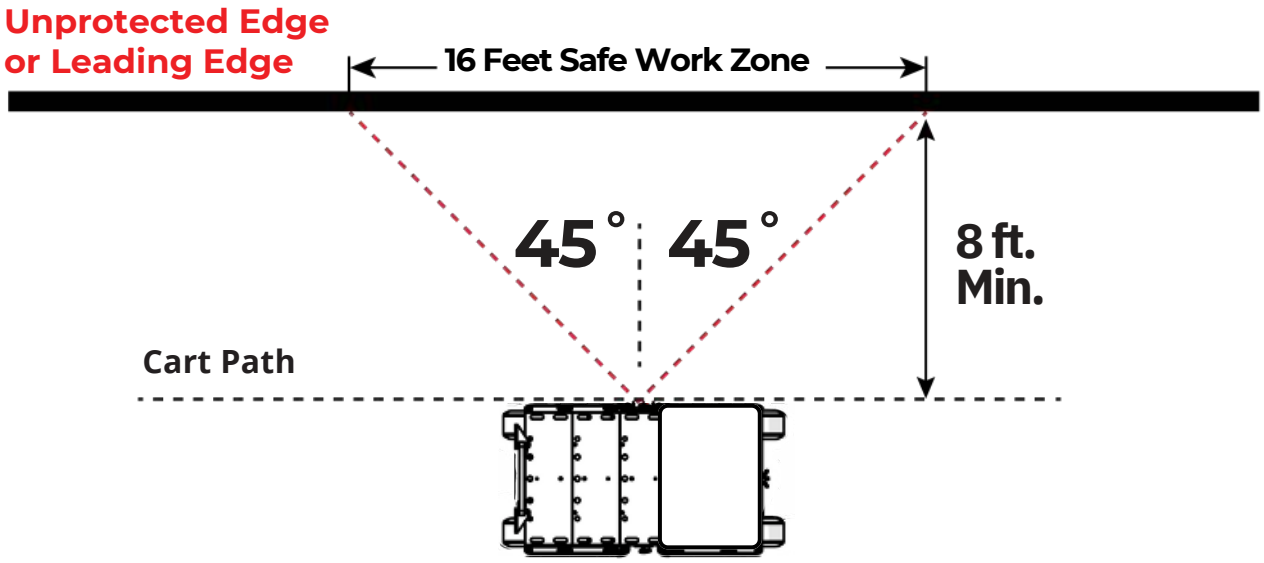

Range of Use is double the distance from the leading edge up to 15 feet.

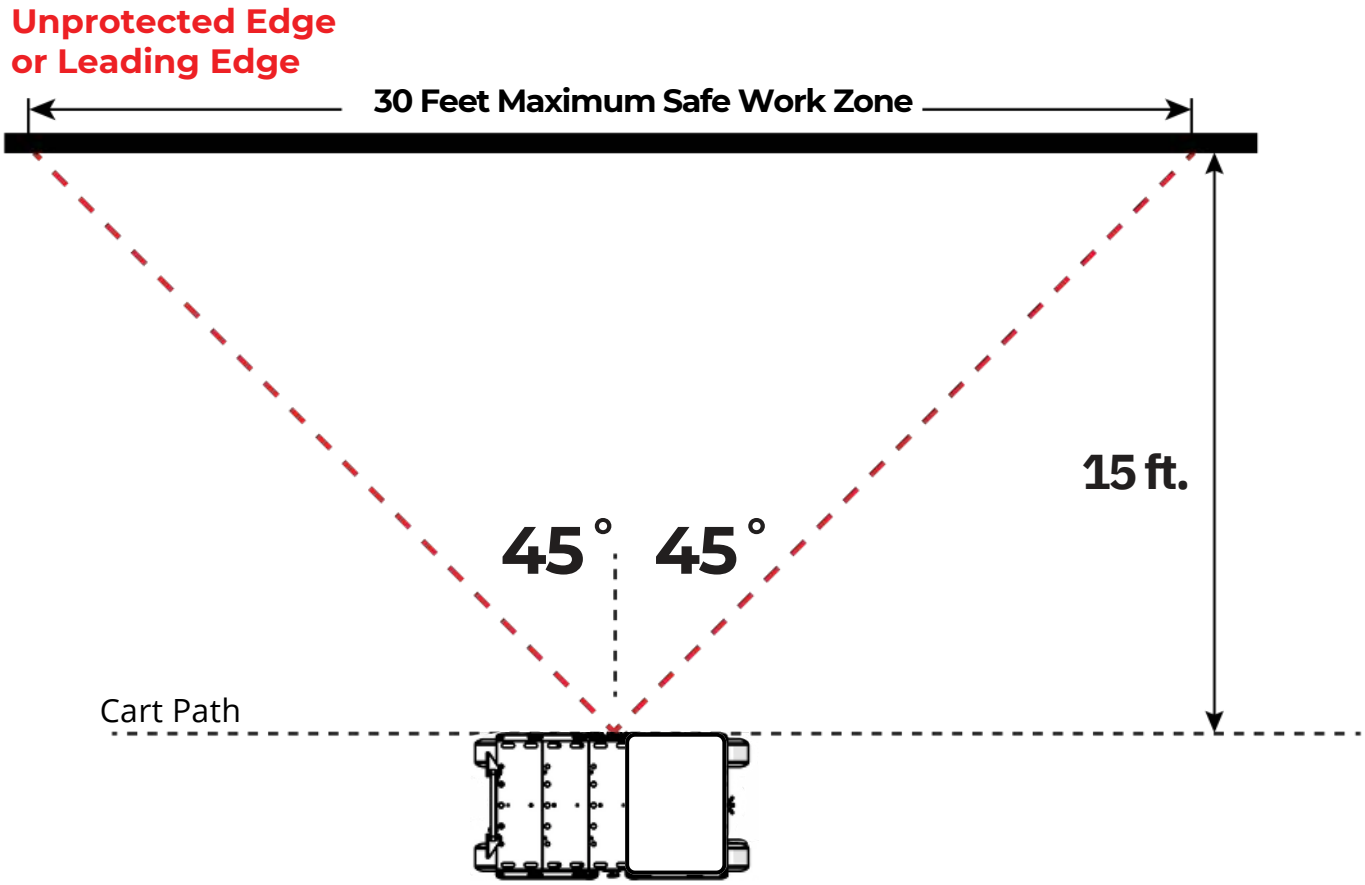

After 15 feet the maximum Range of Use is 30 feet.

PX5
MOBILE FALL PROTECTION

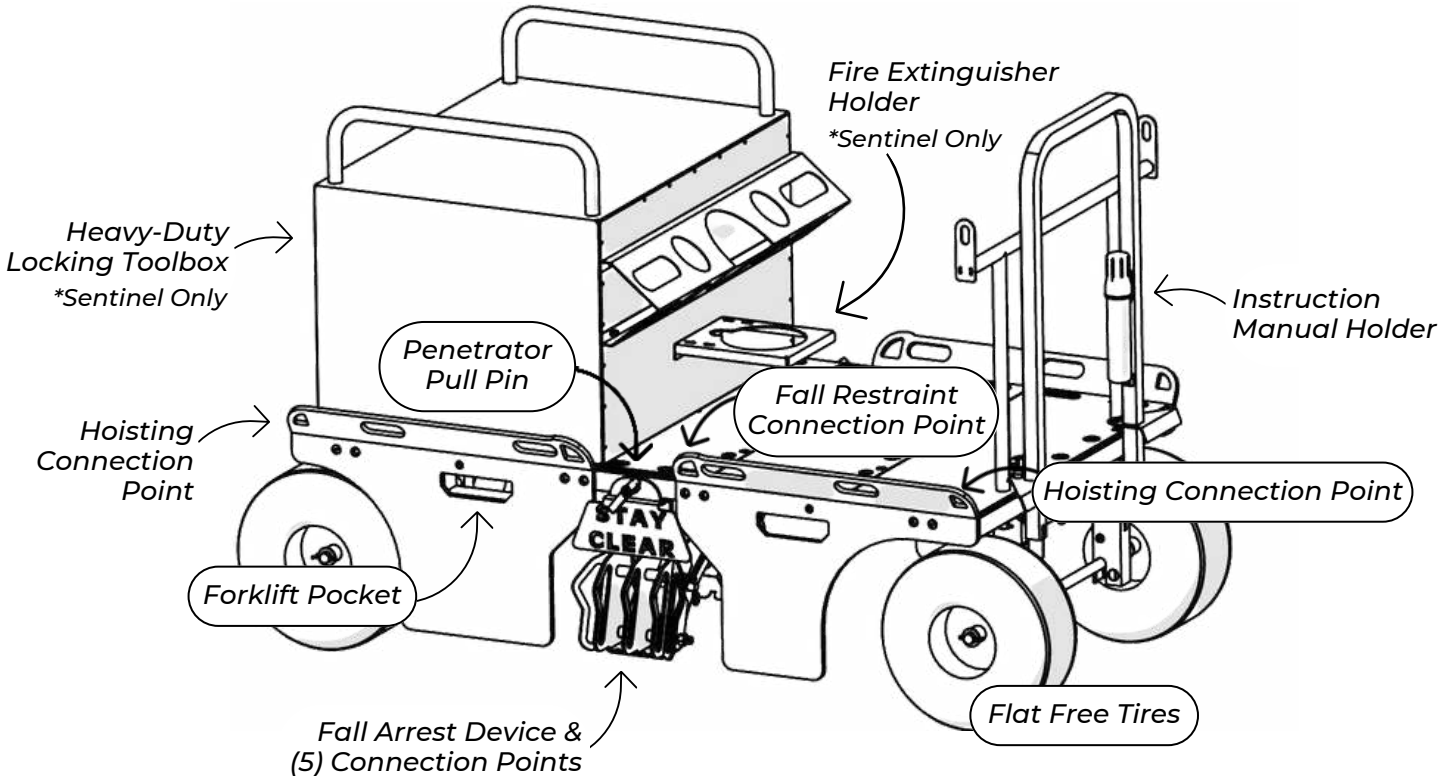

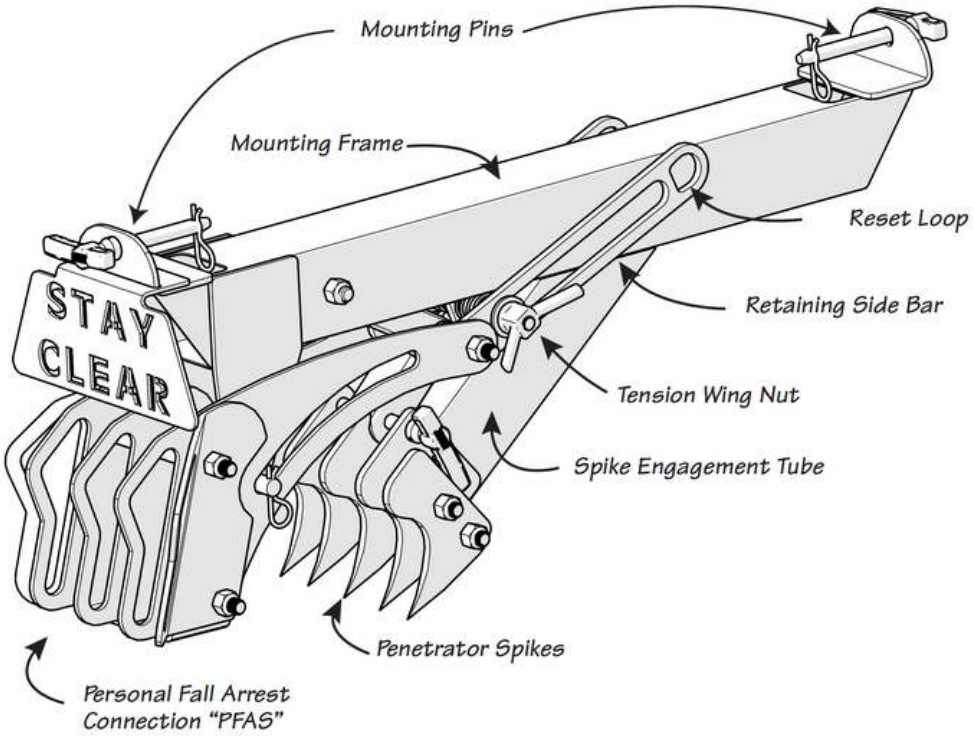

PENETRATOR FALL PROTECTION LIMITED WARRANTY

Tie Down Engineering (TIE DOWN) will repair or replace, free of charge, any part, or parts of the Penetrator Fall Protection Devices (PENETRATOR) that are defective in material or workmanship or both. The limited warranty is in effect for 90 days from date of purchase. Return the defective unit to the dealer or contact Tie Down direct at 800-241-1806, x1525.

- This warranty does not apply to damage or loss caused by any or all of the following circumstances or conditions:
- Damage caused during assembly or installation.
- Parts, accessories, materials or components used with or replacing any PENETRATOR part not obtained from or approved in writing by TIE DOWN.
- Misapplication, misuse and failure to follow the directions or observe cautions and warnings on installation, operation,
- application, inspection or maintenance specified in any TIE DOWN quotation, acknowledgment, sales literature,
- specification sheet or installation instruction and service manual ("applicable literature").
- Use of product in any other application other than those described in TIE DOWN's product information materials.

If any TIE DOWN products are found upon TIE DOWN's examination to have been defective when supplied, TIE DOWN will either: credit the purchaser's account for the purchase price of the TIE DOWN product; replace the TIE DOWN product; or repair the product. TIE DOWN has sole discretion in choosing which option to provide. For this LIMITED WARRANTY to apply, TIE DOWN must receive notice of the alleged defect within 30 days of either the discovery of the alleged defect or the expiration of the warranty period, whichever is earlier. Any claim not made within this period shall conclusively be deemed waived.

If requested by TIE DOWN, purchaser shall return the alleged defective product to TIE DOWN for examination at purchasers expense. TIE DOWN will not pay for expenses incurred in returning a product to TIE DOWN without TIE DOWN's prior written authority. TIE DOWN shall not be liable for any other expenses purchaser incurs to remedy any defect. Purchasers waive subrogation on all claims under any insurance.

Limitation of Liability: It is expressly agreed that the liability of TIE DOWN is limited and TIE DOWN does not function as an insurer. THE REMEDIES SET FORTH IN THIS WARRANTY SHALL CONSTITUTE THE EXCLUSIVE REMEDIES AVAILABLE TO THE PURCHASER OR USER AND ARE IN LIEU OF ALL OTHER REMEDIES, EXPRESS OR IMPLIED. THE LIABILITY OF TIE DOWN,
WHETHER IN CONTRACT, IN TORT, UNDER ANY WARRANTY OR OTHERWISE, SHALL NOT EXCEED THE PURCHASE PRICE OF THE PARTICULAR PRODUCT MANUFACTURED, SOLD OR SUPPLIED BY TIE DOWN.

To Obtain Technical Assistance: To enable TIE DOWN to respond to a request for assistance or evaluation of customer or
user operating difficulty, please provide at a minimum the following information by calling 404-344-0000:

- Model number, serial number and all other data on the specific component which appears to be involved in the difficulty.
- The date and from whom you purchased your TIE DOWN product.
- State your difficulty, being sure to mention at least the following: Application, Environment, Working Surface, and Number of Workers.

THIS WARRANTY DOES NOT COVER NOR EXTEND TO INCIDENTAL OR CONSEQUENTIAL DAMAGE. Some states do not allow the exclusion or limitation of incidental or consequential damages, so the above limitation or exclusion may not apply to you. This warranty gives you specific legal rights, and you may also have other rights which vary from state to state.

No representative has authority to make any representation, promise or agreement except as stated in this Limited Warranty. TIE DOWN reserves the right to make design and other changes upon its products without any obligation to install the same on any previously sold or delivered products.

THERE ARE NO WARRANTIES WHICH EXTEND BEYOND THOSE DESCRIBED ABOVE. EFFECTIVE MAY 2017 THIS WARRANTY SUPERSEDES ALL PRIOR WARRANTIES, WRITTEN OR IMPLIED.

E1541; 10-24-17

TIE DOWN
MANUFACTURING INGENUITY

4404-344-0000 • www.tiedown.com
605 Stonehill Drive SW, Atlanta, GA 30336
sales@tiedown.com

Inspection Checklist and Maintenance Log

TIE DOWN
MANUFACTURING INGENUITY

PX5 Model #_____ **Date of Purchase:** _____
Serial Number: _____ **Purchased From:** _____

Roofing Cart **Date:**								
Frame: Free of Rust?								
Frame: Welded Connections?								
Steering Locking Pin Available?								
Steering Handle/Brake Works?								
Axles/Wheels Rotate Properly?								
Overall Cart Parts?								

Penetrator X5 Device **Date:**								
Frame: Free of Rust?								
Frame: Welded Connections?								
Mounting Pins (2)?								
Penetrator Spikes Free of Damage?								
Retaining Slide Bar Clear of Any Obstacles?								
Wing Nut Tightened/Retaining Slide Bar?								
Inner/Outer Spike Tube Engaged? (If "Yes" DO NOT USE)								
Pull Pins (5) Secured with Safety Cotter Pin?								
Safety and Warning Labels Readable?								

Date **Corrective Action Taken:**

_____

_____

_____

_____

_____

_____